G-MINI Wire Mesh Center Hung Support Option

G-Mini Wire Mesh Center Hung with PAT30

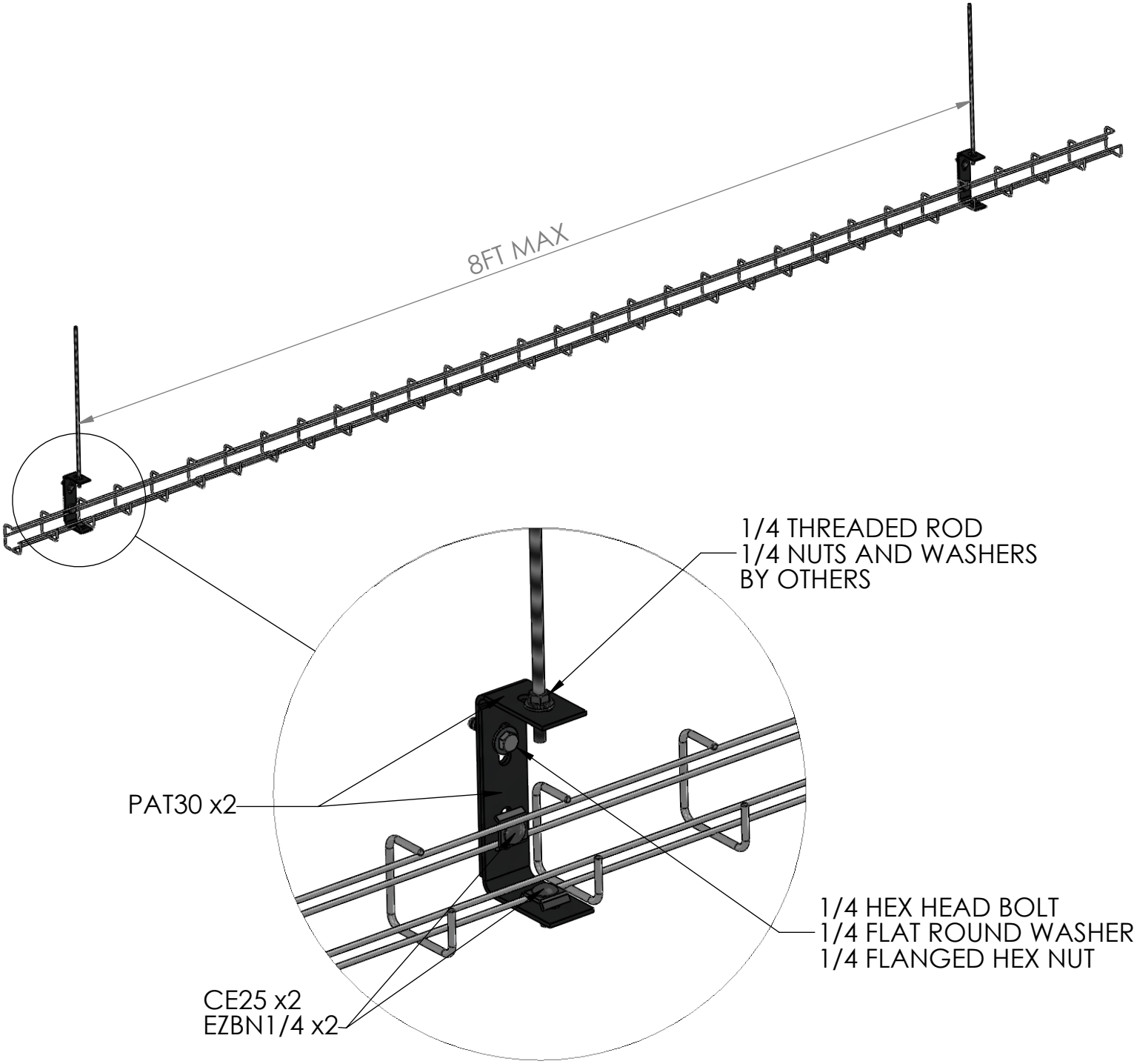

DETAIL A

"Copyright LNA, Inc. Drawings are proprietary and may not be copied or otherwise duplicated or used without express written permission."

BP1103

Legrand
8319 State Rt. 4
Mascoutah, IL 62258 USA
800-658-4641
618-566-3250
Fax618-566-4978
www.legrand.us/cablofil